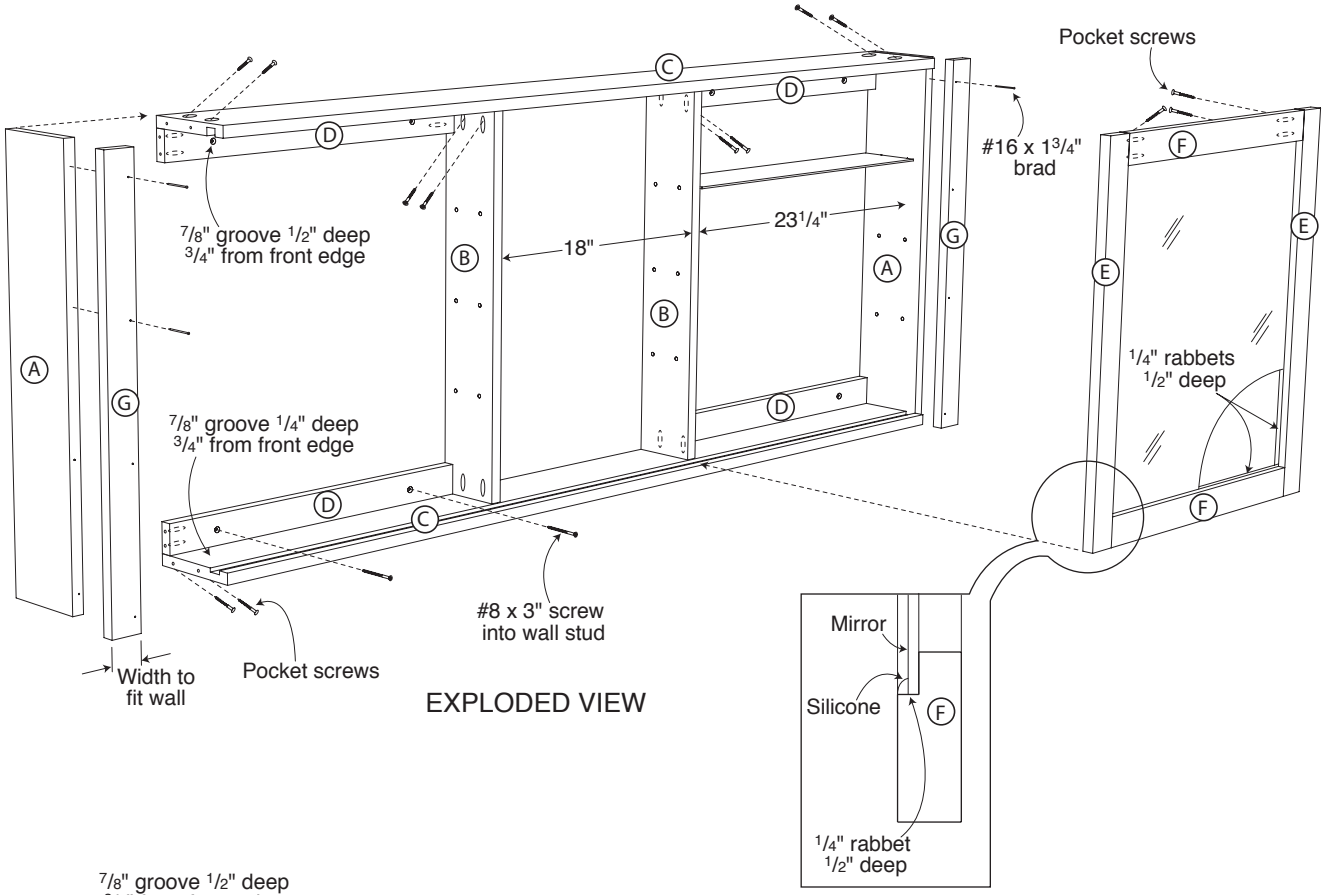

EXPLODED VIEW

RABBET DETAIL

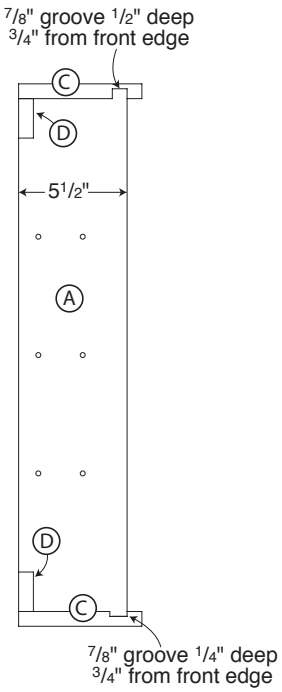

SIDE SECTION VIEW

©Copyright 2012, Meredith Corporation. All Rights Reserved.