Cut Dead-On Miters Every Time

Build this sled in one evening and enjoy making perfect mitered frames for years to come.

You'll turn to this miter sled like a trusted friend whenever you need gap-free corners. To make mitering a cinch, even on long pieces, T-tracks hold a stopblock anywhere along the 25"-long fences. A hardwood block behind the fences shrouds the blade while channeling sawdust downward into the saw.

Before you build this sled, consult the owner's manual to tune up your saw. (See **More Resources** on *page 51* for more articles and a video on saw setup.)

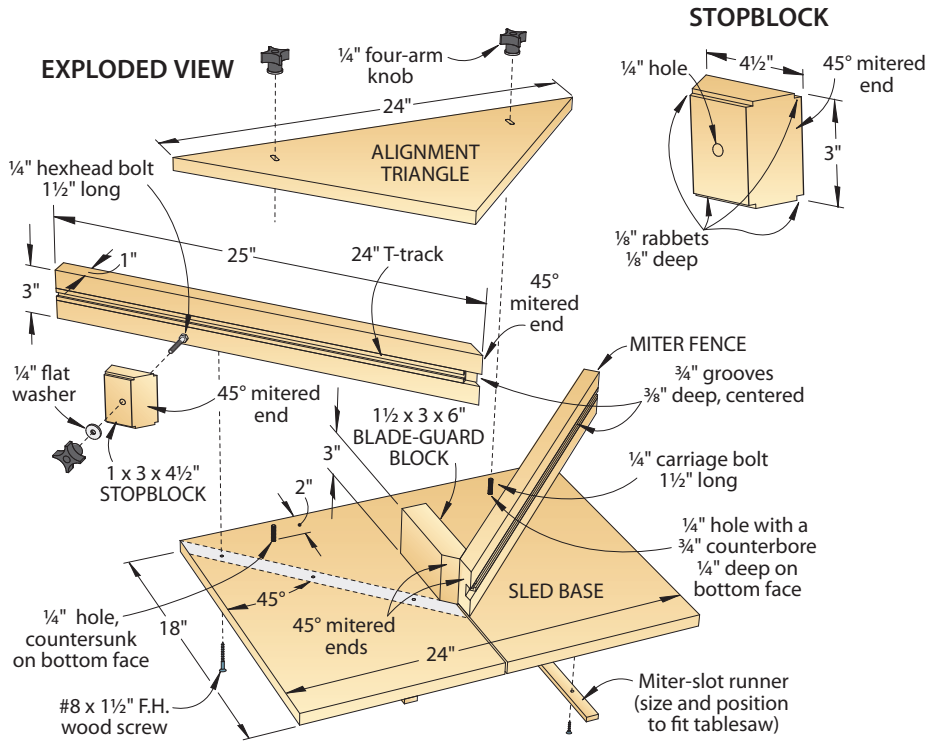

Build your super sled

Begin by cutting the sled base to size from ¾" Baltic birch plywood [**Exploded View**, *right*]. Cut two 18"-long hardwood runners to fit your tablesaw miter slots and two 1×3×25" hardwood miter fences. Using a dado blade that matches the width of your T-track (see **Sources**), center a groove in each miter fence deep enough to recess the T-tracks flush with the fence faces. Cut T-tracks about 1" shorter than the fences and screw them in place with one end flush with the outside end of each fence.

Install a saw blade, lower it completely, and adjust the rip fence to center the sled base above the blade.

Quick Tip: Make your "runner" buddies proud. Drop two dimes in each miter slot and lay the miter-slot runners on top of them so the runners stand just proud of the saw table.

ALIGNMENT TRIANGLE

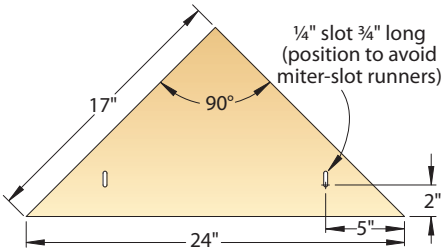

Next, attach the sled base to the runners [**Photo A**] by pressing it against the tape and slide the base off the saw. Flip the base over to countersink, drill, and screw the runners to the sled base.

Now drill two ¼" holes 2" from the back edge of the sled base, without drilling the miter-slot runners. Counterbore holes on the underside of the base to accept a ¼×1½" carriage bolt head.

From ¾" MDF or an MDF-core sheet, cut a 17" square and use a reliable square to check for a precise 90° corner. Using a bandsaw or jigsaw, cut the square in half diagonally. Center and clamp one triangle onto the sled base while keeping the long edge flush with the back edge of the sled base. Turn the base and triangle upside down and transfer the ¼" hole locations to the triangle. Remove the triangle and lay out two ¾"-long slots perpendicular to the long edge and centered on the hole locations. Drill pairs of ¼" holes to define the slot ends and cut away the waste between the holes.

Now loosely bolt the alignment triangle onto the sled base with its point centered. Using the 45° angle on a combination square, align the triangle on the sled base [**Photo B**].

Next, use the triangle and sled to miter one end of a test scrap until it fits the 45° angle on your square with no gaps. Then make test cuts in four pieces of scrap and check that they go together without gaps, as shown in "How to tell if you're winning the frame game" on *page 51*.

After your sled cuts airtight miters using the alignment triangle, you're ready to attach the two miter fences. Use the sled to miter the fence ends where the T-track stops short, and apply double-faced tape to the bottom edges [**Photo C**]. Press one fence against the edge of the alignment triangle with the mitered tip just over the kerf in the sled base. Then press it in place. Repeat for the other miter fence. Your first cut will trim the fence miters just enough to create a zero-clearance backer.

Attach double-faced tape to the miter-slot runners and align them with the front edge of the saw table. Press one edge of the sled base against the rip fence as you tilt the sled down against the table and press it against the miter-slot runners.

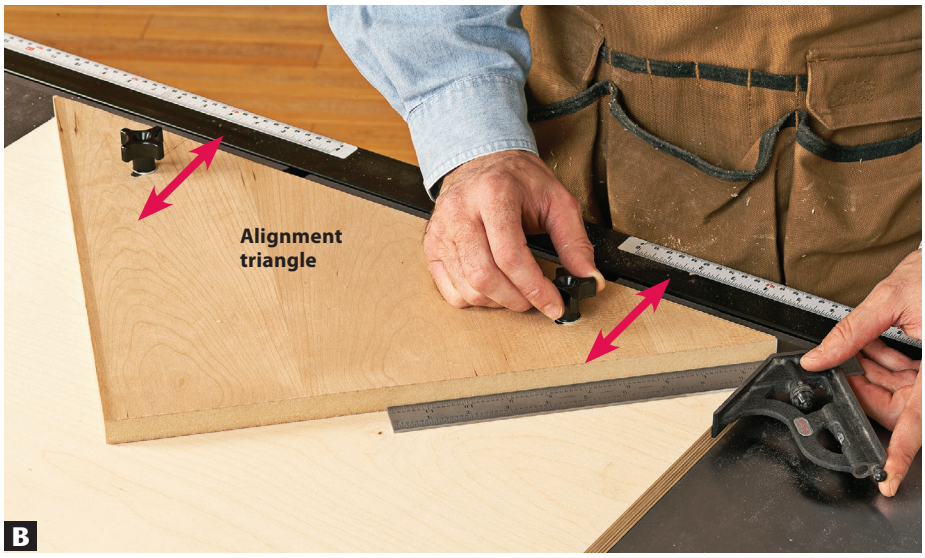

Press your combination square against the edge of the sled base and move the alignment triangle up or down until the edge rests tight against the square. Do the same on the other side. Then secure the alignment triangle in place by tightening the knobs.

To test the accuracy of the miter fences, again miter the four test scraps and assemble them into a frame. Once you achieve gap-free miters, drill and screw the miter fences to the sled base.

To make the blade guard, laminate two pieces of ¾×3×6" hardwood and allow to dry. Use your tablesaw with the blade tilted 45° to bevel both faces at one end, forming a point at the center. Then glue and clamp this blade-guard block to the sled base behind the fences

A sled helps you cut tighter miters

A dedicated tablesaw miter sled gives you two big advantages over miter gauges and mitersaws. First is price. You can build this sled from a quarter-sheet of Baltic birch plywood, scrap hardwood and MDF, and $25 in hardware—far less than a mitersaw or an aftermarket miter gauge. Second, after the initial alignment, you'll get consistent results with a miter sled without spending additional time on setups and test cuts.

How to tell if you're winning the frame game

To test the position of the alignment triangle, cut a test frame with four equal sides of ¾×3×12" MDF. Those eight miter cuts multiply the slightest misalignments enough to find and fix them.

Here's how to go about it: Although you'll normally cut from both sides of your miter sled when it's finished, make these test cuts *only from the left side*. First miter one end of each piece. Use double-faced tape to adhere a stopblock to the sled base against the alignment triangle and a hair less than 9" from the center kerf. Flip each test piece end for end and cut the second miters.

Tape three mitered corners tightly together and examine the fourth joint. If it looks like the one *far left*, rotate the alignment triangle counterclockwise. If the fourth joint resembles the corner *middle left*, gently rotate the alignment triangle clockwise.

If you end up with an even gap on all four corners, like the one *near left*, blame the saw-blade tilt. Check the blade with a reliable square or drafting triangle to make sure it stands 90° to the saw table.

[**Exploded View**]. Finally, cut a stopblock to size as shown *opposite* and drill it for a ¼" hexhead bolt.

Let's go sledding

To make a frame, first cut blanks for both pairs of frame sides. Using the right fence of your jig, miter one end of each frame part, as shown on *page 49*.

For four sides of equal length, set your stopblock on the left miter fence and cut the opposite end of all four parts. For sides of unequal length, cut the longest sides first so you'll still have a usable blank for the short sides in case you make a mistake. Then reset your stopblock and cut the short sides.

To miter extra-long parts, first glue a beveled block to a strip of plywood or MDF cut to the length you need to accommodate your frame parts. Then clamp the extension to a sled fence [**Photo D**] and miter the opposite ends of your frame parts.

Double-faced tape holds the miter fences in position while you check their alignment by cutting test pieces to make a frame. The tip of the fence overlaps slightly less than half of the saw kerf in the sled base, with the T-track recessed 1" from the end.

For workpieces longer than your miter fences, cut them to identical lengths using a stopblock extension. Make the stopblock 2" thick so that the mitered end of your workpiece can touch the mitered end of the stopblock.

MORE RESOURCES

FREE VIDEO

- "Tune Up Your Tablesaw" at woodmagazine.com/tstuneup

RELATED ARTICLES

- "Tune Up Your Tablesaw" issue 152 (November 2003) $
- "Miter Gauges & Sleds" issue 179 (October 2007) $

($=Download this article from woodmagazine.com/plans for a small fee. Type "tune up" or "miter gauge" in the Search box.

Sources

T-track: 4' aluminum track no. 20054, $20, Rockler, 800-279-4441, rockler.com.
Knobs: Four-arm knob with a ¼" 18-thread insert (2) no. 27R14, $2.50, Woodcraft, 800-225-1153, woodcraft.com.