FRAME JIG

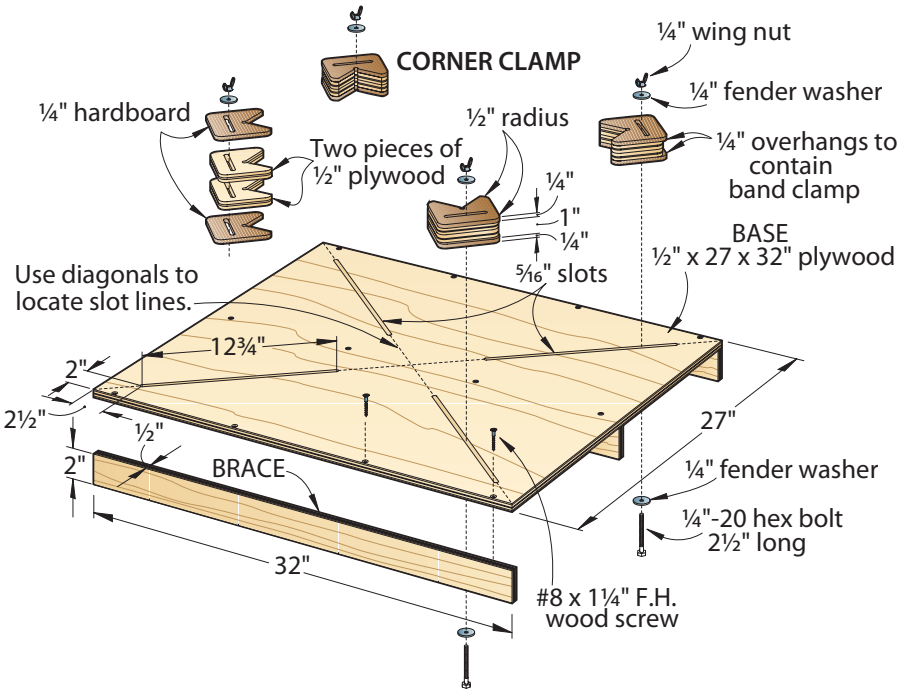

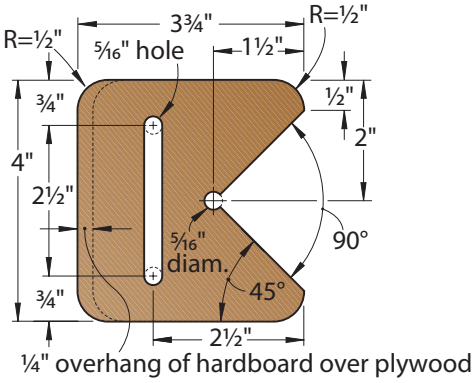

CORNER CLAMP