# WOODStore.net

Browse more than 1,300 woodworking project plans, DVDs, back-issue collections, videos, tool reviews, books, & more.

## Thank You!

Thank you for ordering this *WOOD*® magazine download. We hope you enjoy being part of our online experience and that you have fun expanding your woodworking skills.

Please remember that this copyrighted material is for your use only. It is unlawful to share this file with someone else or to reprint it in any form.

Dave Campbell
Editorial Content Chief, *WOOD* magazine

## Adobe Acrobat Reader Troubleshooting Guide

If you can read this page, your Acrobat Reader program is working correctly! But you may still have problems or specific issues, such as printing and saving your downloadable file.

### My printer won't print the text correctly

Almost all printing problems are due to not enough free system resources memory. The files are very memory intensive because they include graphics, text, and photos. Close all other programs/applications and print directly out of the Acrobat Reader program, not your Web browser.

### Patterns are not printing full-size

Make sure your printer is set to print at 100 percent, "print to fit" is not checked and "page scaling" is set to "none". These settings are selected in the printer setup or printer options.

### I can't find my file now that it's downloaded

Rather than viewing the plan in your browser, you must save it to your hard drive. Download the file again, except this time try right-clicking on the red download button. A menu window will open. Select "Save target as" or "Save link as" to save the file to your hard drive. Once saved, you can open it up with Adobe Acrobat Reader.

For more details on using Adobe Acrobat Reader please visit our online help section at:
**woodmagazine.com/adobe**


## WOOD Store

**Customer Favorites**

Shop Tools & Accessories

Indoor Furniture

Outdoor Furniture

Mission Furniture

Visit the WOOD Store at:

**WOODStore.net**

# Take the Loose-tenon Plunge

**Rout this strong joint quickly and accurately with a plunge router and a simple jig you can build.**

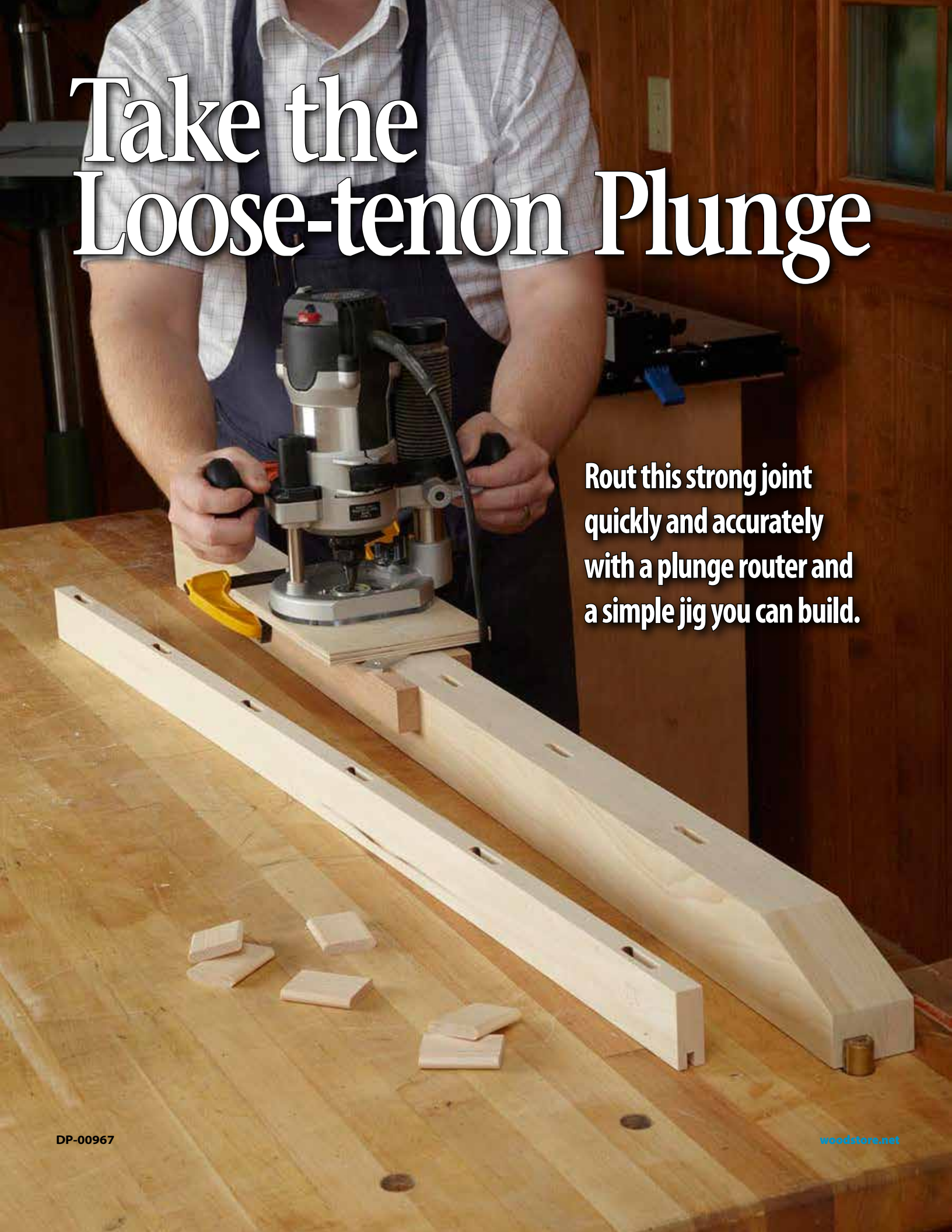

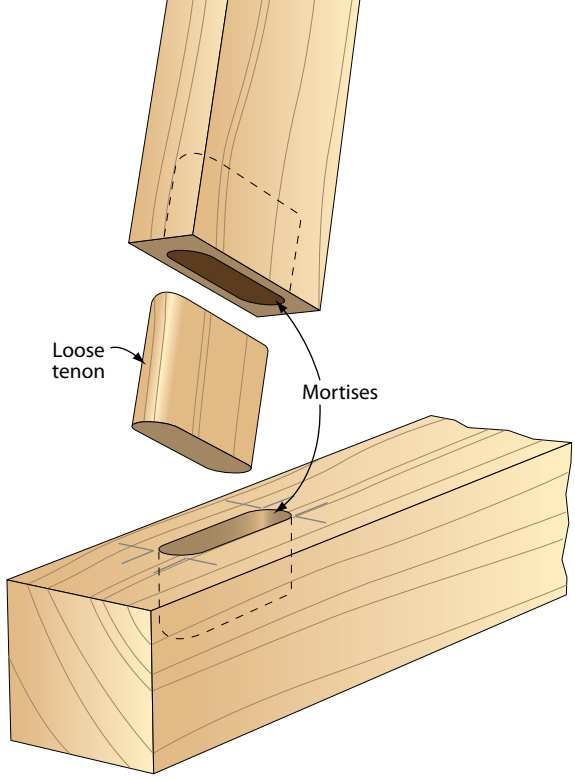


LOOSE-TENON JOINT

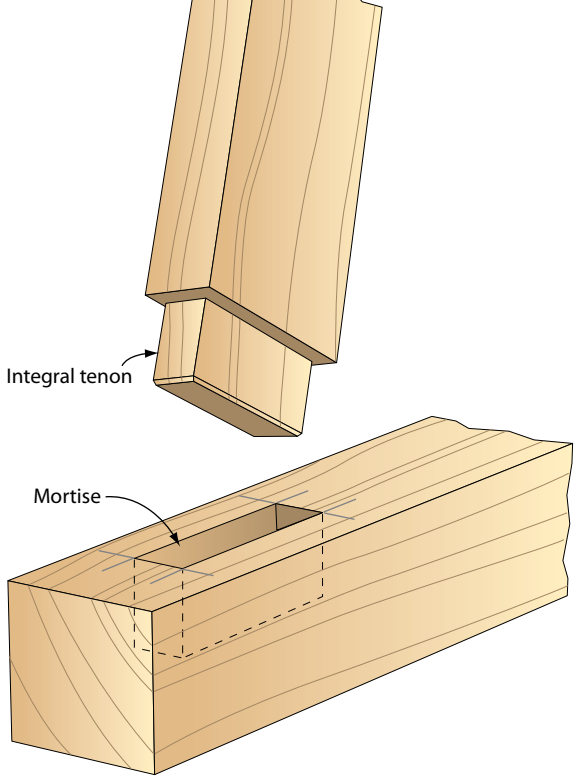


TRADITIONAL MORTISE-AND-TENON JOINT

Also known as *floating* tenons, this joinery method features a piece of wood—the tenon—inserted into matching mortises, as shown *above*, and it's just as strong as a joint made with integral tenons, shown *above right*. Loose-tenon joinery trumps traditional mortise-and-tenon construction in the following ways:

▶ With a plunge router, you can rout mortises in long, wide, or thick workpieces too unwieldy to place on a mortiser or drill-press table.

▶ By using one bit, you create consistently sized mortises with clean, smooth walls for the best gluing surface. And you eliminate the fuss of custom-fitting each tenon to a bored-out or chiseled mortise.

▶ You can make surplus loose-tenon stock in common sizes and keep it on hand for future projects, saving setup time. And you can make this stock from scrapwood that might otherwise be tossed out.

▶ Because you don't have to allow extra length on workpieces for the integral tenons, you make more efficient use of furniture-grade material.

## What you need to get started

▶ A plunge router with enough power—at least 1½ hp—to rout mortises in hardwoods.

▶ An upcut spiral bit, typically no larger in diameter than one-third the thickness of the stock you'll be mortising. (See **Make wise bit choices** at *right*.)

▶ A jig for guiding the router on your workpieces. Although you can rout mortises using your router's edge guide, our jigs work better because they trap the bit, keeping it from accidentally wandering.

▶ A guide bushing, larger than the bit diameter and sized to fit the slot on your jig. Because you'll seldom make mortises larger than ½" wide, ⅝" and ¾" bushings typically work best.

## Make wise bit choices

We recommend upcut spiral bits for mortising because they plunge easily into wood, cut without grain tear-out when sharp, and the upward-angled flutes pull chips out of the mortise for cooler cutting. A downcut spiral bit pushes the chips deeper into the mortise, creating more heat and potentially dulling the bit quicker.

A straight bit can also be a good choice *if* you get one made for plunge cutting. This design has shear-cutting bevels at its tip (*bottom left*). Straight bits without this feature (*bottom right*) trap tiny "islands" of wood between the carbide tips, preventing the bit from plunging straight down.

**Upcut spiral bit**

**Downcut spiral bit**

**Plunging straight bit**

**Common straight bit**

**The nonconnected cutters create this burnt "island."**

POSITION THE MORTISING JIG

Mark the center of the mortise on your workpiece, then align the jig's witness marks to that centerline. Pivot the clamping blocks to capture the workpiece.

MOVE OFF-CENTER WITH A FIXED-PLACEMENT JIG

As shown in this setup, you can rout mortises offset from the center of the workpiece. To change the offset, simply reposition the clamping block.

## Make a mortising jig

Two types of shop-made jigs work great for plunge-mortising: self-centering and fixed-placement. First, let's take a look at a self-centering jig that, as its name suggests, automatically centers mortises across the thickness (or width) of your workpiece. The one shown at *right* centers mortises on stock up to 3¼".

When building the jig, cut the slot to the length of your mortise plus the difference between the bit and guide bushing diameters. For example, if you're making a ½"-wide by 2"-long mortise using a ⅝" guide bushing, make your slot ⅝" wide and 2⅛" long, centered on the witness marks (lines bisecting the width and length of your jig template). Cut the slot carefully so the guide bushing moves along it smoothly and without any side-to-side play.

To use this jig, position it on your workpiece, as shown *top left*. Install in your router the bit that matches the tenon thickness you want, set the plunge depth, and rout the mortise in ¼"-deep increments.

An easy-to-make, fixed-placement jig lets you rout mortises at a specific distance from the workpiece edge, as shown *top right*. Like the self-centering jig, it has a slot for a guide bushing, but has just one clamping block screwed to the template, parallel to the long edge and square to the template's face.

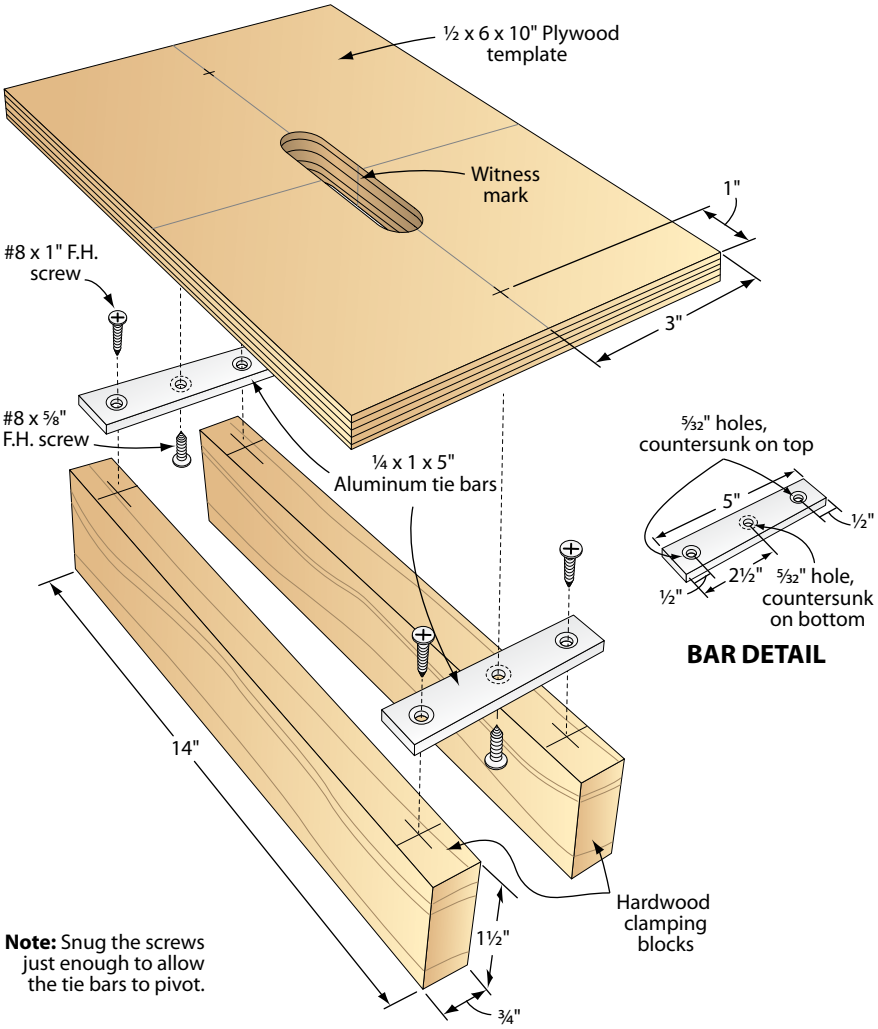


**Note:** Snug the screws just enough to allow the tie bars to pivot.

## MAKE A POINT OF ROUNDING THE TENON EDGES

Using a round-over bit slightly larger than half your stock's thickness—¼" for this ⅜"-thick blank—round the edges, creating arch-shaped edges.

The "pointed" edges of the tenons register against the rounded ends of the mortises while creating space for excess glue to collect.

## Now make the loose tenons

Use only hardwoods for tenon stock because softwoods lack the strength needed. For best results, choose straight-grain boards with no knots or defects. ***Quick Tip:** Use sapwood cutoffs from cherry and walnut to make loose tenons. Although colored differently, this wood has the same strength and traits of the heartwood.*

Begin by planing tenon stock to a thickness equal to the width of your mortise. The fit should be snug enough to keep the tenon in a mortise when tipped upside down, but still allow you to pull it out easily by hand. If you don't have a planer, rip tenon stock to thickness on your tablesaw.

Now, rip the tenon blanks to width, equal to the full length of the mortise. Next, round the edges on a router table, as shown *above*. Finally, crosscut the individual tenons to length, and ease the crisp ends of the tenons, as shown *below*.

## Tips for loose-tenon assembly

Because this method requires applying glue to twice as many mortises as integrated-tenon joinery, it's best to cut the job in half. Start by gluing tenons into mortises on project parts that form one-half of joints, as shown *below*. There's no need to clamp snug-fitting tenons on this half. With that done, glue and clamp the remainder of the joints.

Produced by **Bob Hunter** with **John Olson** and **Kevin Boyle**

### More Resources

- Need help choosing a plunge router? Read reviews at **toolreviews.woodmagazine.com**
- FREE Video: Shop-tested loose-tenon joinery tools: **woodmagazine.com/loosetenon**

## EASE THE ENDS

Plane or sand a slight chamfer on the tenon ends so they slip easily into the mortises and scrape less glue from the mortise walls.

## GLUE THE TENONS IN PLACE

After coating the mortise walls and lower tenon faces with glue, tap the tenon into the mortise with a mallet until it bottoms out.

# Visit the WOOD® family of helpful Web sites!

## WOODStore.net

Browse more than 1,300 woodworking project plans, DVDs, back-issue collections, videos, tool reviews, books, & more.

Plans


"Complete Guide" DVD-ROM's

Videos


Back-Issue Collections

## WOODmagazine.com/videos

### DVDs or downloads


The biggest names in woodworking help you build your skills with affordable videos (up to 2 hours long). Save money by doing the download.

### FREE magazine support 24/7

WOODcuts

WOOD magazine editors provide videos that enhance the content in the magazine. New videos added regularly.

### By woodworkers, for woodworkers

woodtube

Watch free videos of other woodworkers showing their stuff, from shop tips, to favorite jigs, to... well, just about anything!

### Watch a demo before you buy

TOOL SCHOOL

Don't spend a penny on a tool until you learn how it works. Tool School is like having a free woodworking show on your desktop!

## WOODmagazine.com

### A wealth of information just a click away.

WOODmagazine.com speaks to woodworkers of all skill levels with free woodworking plans, helpful forums, hundreds of articles, and more services to help you become a better woodworker.


## toolreviews.woodmagazine.com

### Everybody's a tool critic. Now it's your turn!

Readers rely on *WOOD* magazine for unbiased reviews of woodworking tools and accessories. You'll find them here, all in one place. While you're there, add reviews about the tools in your shop. Just click to compare specs, prices, and more.